CUCKOO B-Fit

Dynamic 2-in-1 Treadmill

User Manual Model：TM-YT102



Please read all precautions and instructions in this manual in detail before using this equipment.

Contents

Safety Tips----------3
Installation Steps----------5
Technical Specifications----------10
Treadmill Introduction----------10
Operation Guide----------11
Running/Walking Mode Change----------14
Transporting Instructions----------18
Grounding Description----------19
Safety Exercise Tips----------20
Warm-up Exercise----------22
Daily Maintenance----------23
Exploded View----------25
Parts List ----------26

Dear customers!

Thank you for purchasing CUCKOO Treadmill Machine.

Please retain this manual (including the Warranty) for future reference. This manual will be of great help when you have any question or when the functions do not work properly.

Product Benefits

- **Dynamic Treck**
  Seamlessly switch between walking and running modes for a diverse workout experience.

- **Personalized Programs**
  Choose from 15 available programs tailored to your exercise intensity and preferences.

- **Robust Support**
  With a weight capacity of up to 100kg, this treadmill ensures strength and stability during use.

- **Space-Saving Design**
  Its compact and foldable design effortlessly blends into any interior, maximizing space efficiency.

- **Effortless Setup**
  Enjoy a hassle-free installation process for immediate use without complications.

- **Customizable User Programs**
  Create and store up to 3 personalized workout programs for convenience and consistency.

- **Activity Tracker**
  Keep track of steps and calories burned during workouts to monitor progress and achieve fitness goals.

- **Adjustable Incline**
  Easily modify the treadmill's angle to increase workout intensity and target specific muscle groups.

Safety Tips

1. Place the motorized treadmill on a neat and flat surface; do not put it on a thick carpet as this can affect the air circulation in the lower part of the treadmill. Additionally, do not place the motorized treadmill near water or use it outdoors; ensure it is protected from moisture.
2. Only after the motorized treadmill is fully installed and the motor protection cover is secured should the power be switched on. Plug the power cord into a properly grounded 10A power outlet. We recommend using a socket with an overcurrent protector to ensure the safety of both the treadmill and the user.
3. Please do not remove the protective cover casually. If you need to open it for maintenance, make sure to unplug the power cord first. (Professional repair is recommended.)
4. When placing the motorized treadmill, ensure it does not block the wall socket to facilitate easy access for plugging in.
5. The motorized treadmill power cord is specialized; if it is damaged, please purchase a replacement from the dealer or contact our company directly.
6. Ensure all bolts on the installed motorized treadmill are securely tightened.
7. Please note that the motorized treadmill is a dedicated machine and should not be modified for other uses.
8. Do not insert any objects into any part of the equipment, as this may cause damage.

Attention

To avoid accidental injury, you must pay attention to the following:

1. To prevent injury, please warm up before exercise.
2. Any strenuous exercise can only start 40 minutes after meals.
3. Before using the treadmill, check whether the power supply is loaded and if the safety key is effective. Then, attach one end of the safety key to the treadmill. Clip the other end to your clothes or belt; in case of an emergency, you can pull off the safety key.
4. Please do not turn it on when standing on the running belt. When the power is on, the running belt may pause at the beginning of exercise. You must stand on the plastic skid boards on either side of the electric treadmill until the running belt moves.
5. Please naturally swing your arms while exercising, look ahead, and do not look down at your feet.
6. Accelerate gradually when you exercise. Adapt to the existing speed before accelerating further.
7. Do not wear overly long or loose clothing when you exercise to prevent it from getting caught in the motorized treadmill. Usually, wear running shoes or fitness shoes with rubber soles.
8. When using the motorized treadmill for the first time, be sure to hold on to the handrails. Do not let go until you feel comfortable.
9. Continuous exercise should not exceed 90 minutes. Please unplug the power cord and remove the safety switch in time to avoid overloading.
10. If any unusual situation occurs, you must pull off the safety key immediately, place your hands on the handle, and jump onto the anti-skid boards before leaving.
11. When not using the treadmill, keep the safety key stored away and keep minors away from it. Minors using the treadmill must be accompanied by adults.
12. Before folding the treadmill, it must be completely stopped. It is not allowed to operate the treadmill after folding.
13. A space of 2000mm × 1000mm must be reserved at the rear of the treadmill.

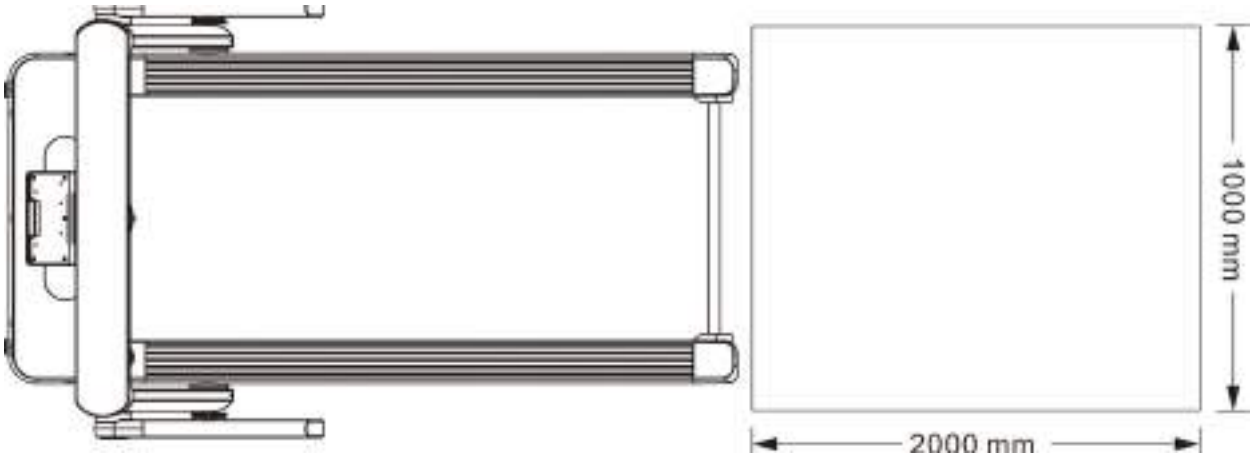

⚠ Warning：

1. Two or more people are not allowed to use the treadmill at the same time.
2. Please use it under medical supervision if you are unwell.
3. The heartbeat monitoring system is for reference only and cannot be used for medical purposes. Excessive exercise can cause severe injury or death. If you feel dizzy, stop exercising immediately.
4. Children, disabled people, and pets should be kept away from the treadmill to prevent accidents.

Technical Parameter

Display:	**LED**
Input Voltage:	**220V/60HZ**
Display Readout:	**Speed, Step Number, Time, Distance, Calorie**
Built-In Program	**P1 – P15**
Custom Program	**U1 – U3**
Running Speed range:	**1 – 14 KM/H**
Walking Speed range:	**1 – 6 KM/H**
Motor:	**DC Motor Peak Power 2.0 HP**
Running Belt:	**1050 * 420 MM**
Folded Size (L x W x H):	**1327 * 758 * 200 MM**
Unfolded Size (L x W x H):	**1255 * 758 * 1087 MM**
Package Size (L x W x H):	**1430 * 750 * 165 MM**
G.W/N.W:	**39.2/32.5KG**
Max Weight Supported:	**100 KG**

Operation guide

Treadmill introduction

220V DC controller, dual display, inch, walking and running treadmill. Pull up the armrest to change to running mode; the treadmill speed range is 1-14KM/H. Put down the armrest to change to walking mode; the treadmill speed range is 1-6KM/H.

In running mode, the handrail control panel (sub-display) lights up and is controlled by touch buttons (the remote control is invalid), and the safety key is effective.

In walking mode, the electronic panel (main display) on the motor cover is illuminated and is controlled by the remote control. The touch buttons and safety key do not work.

In the standby state, switch the state of walking and running through the position of the armrest. The running state cannot be switched when running. After the end of the campaign, you can switch. Note: If you need to switch to walking mode, please be sure to remove the mobile phone bracket before putting down the column, so as not to trip over the iPad holder bracket!

A. Running Mode Touch Button Description

The running mode sub-display

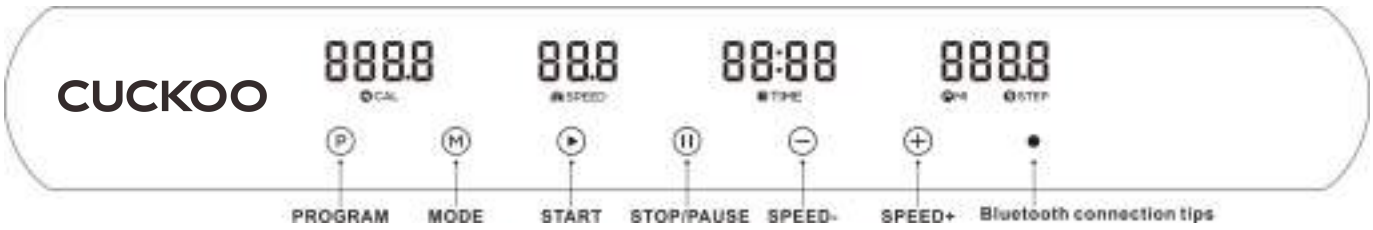

1. START：Start the treadmill.
2. STOP：Press once to pause the treadmill, and press once again to stop running (The remote control is invalid).
3. Speed+ ： When the treadmill is running, press to increase the speed of the treadmill.
4. Speed-：When the treadmill is running, press to reduce the running speed of the treadmill.
5. MODE：In the standby state, you can cycle to select three different countdown operation modes, namely: time countdown mode, distance countdown mode, calorie

countdown mode. In the countdown mode, you can set the relevant backward counting value by the "+" and "-" keys. After setting, press the "Start" key to start the treadmill.
6.Ⓟ PRO. ： In the standby state, use this key to switch 15 system preset programs (P1-P15) and 3 custom programs (U1-U3).

	Time / Program		Set time/20 time periods=Up and down time period running time																			
			1	2	3	4	5	6	7	8	9	10	11	12	13	14	15	16	17	18	19	20
Novice	P01	SPEED	2	3	3	4	5	3	4	5	5	3	4	5	4	4	4	2	3	3	5	3
	P02	SPEED	2	4	4	5	6	4	6	6	6	4	5	6	4	4	4	2	2	5	4	2
	P03	SPEED	2	4	4	6	6	4	7	7	7	4	7	7	4	4	4	2	4	5	3	2
	P04	SPEED	3	5	5	6	7	7	5	7	7	8	8	5	9	5	5	6	6	4	4	3
	P05	SPEED	2	4	4	5	6	7	7	5	6	7	8	8	5	4	3	3	6	5	4	2
Intermediate	P06	SPEED	2	4	4	4	5	6	8	8	6	7	8	8	6	4	4	2	5	4	3	2
	P07	SPEED	2	3	3	3	4	5	3	4	5	3	4	5	3	3	3	6	6	5	3	3
	P08	SPEED	2	3	3	6	7	7	4	6	7	4	6	7	4	4	4	2	3	4	4	2
	P09	SPEED	2	4	4	7	7	4	7	8	4	8	9	9	4	4	4	5	6	3	3	2
	P10	SPEED	2	4	5	6	7	5	4	6	8	8	6	6	5	4	4	2	4	4	3	3
Advance	P11	SPEED	2	5	8	10	7	7	10	10	7	7	10	10	5	5	9	9	5	5	4	3
	P12	SPEED	3	4	9	9	5	9	5	8	5	9	7	5	5	7	9	9	5	7	6	3
	P13	SPEED	3	6	7	5	9	9	7	5	5	7	9	5	8	5	9	5	9	9	4	3
	P14	SPEED	2	2	4	5	6	5	4	3	2	1	2	3	4	5	6	5	4	3	2	1
	P15	SPEED	2	4	6	8	6	6	4	4	2	2	2	4	6	8	6	6	4	4	2	2

System program table:

Custom program: The user can set the running speed for each segment. Press the "+" and "-" keys to adjust the running speed of each stage. Press the "MODE" key to confirm the setting and proceed to the next stage. Press "START" to begin the treadmill until the setting of the 20th stage is complete.

B. Walking Mode Remote Control Description

The walking mode main display



1. Remote Control Introduction:

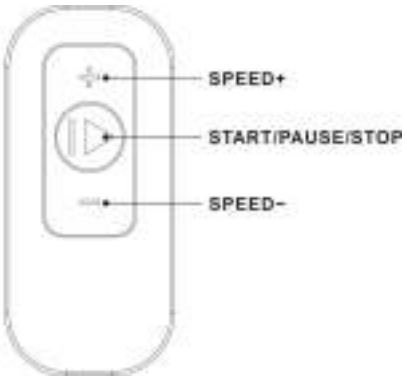

The remote control features three buttons. The upper button is labeled "Speed +," the lower button is labeled "Speed -," and the middle button is labeled "Start / Pause / Stop." Press once to start running, press again to pause, and hold for three seconds to stop running.

2. Remote Control Pairing:

Ensure the treadmill is in the folded configuration. Press and hold the start button on the remote control until a buzzer "beep" indicates successful pairing.

Note: The remote control cannot be used to operate the treadmill while it is running.

C. Error message code meaning:

Code	Possible Issues	Possible Causes	Treatment
SAFE	Safety switch off	The safety switch board is damaged	Replace the safety switch board
		meter damage	Change meter
Er 1	Display board not showing message Motor driver signal	The upper and lower control cables are in poor contact	Reconnect the upper and lower control cable
		The upper and lower control cable is broken	Replacement cable
		Electronic watch damage	Change electronic watch
		Motor driver failure	Replace motor driver
Er 3	Overvoltage protection	Input overvoltage	Check whether the AC voltage is higher than 265V
		Motor driver failure	Replace motor driver
Er 4	Overcurrent protection	The motor pulley is too tight	Refasten belt
		There's too much friction on the board and the belt	Add lubricating oil between plate and belt
		Motor driver failure	Replace motor driver
Er 5	Overload protection	The motor belt is too tight	Adjust belt tightness
		Running belt and running plate friction	Add lubricating oil between plate and belt
		Motor driver failure	Replace motor driver
Er 6	Open circuit protection	Motor not connected	Connecting motor
		Motor open circuit	Replace motor
		Motor driver failure	Replace motor driver
Er 7	The motor is not properly connected Received the display board signal	The upper and lower control cables are in poor contact	Reconnect the upper and lower control cable
		The upper and lower control cable is broken	Replacement cable
		Electronic watch damage	Change electronic watch
		Motor driver failure	Replace motor driver
Er 13	IGBT Short circuit	Motor driver failure	Replace motor driver
Er 14	The load short circuit	Motor short circuit	Replace motor
		Motor driver failure	Replace motor driver

Running/Walking Mode Change

Step 1:

Turn the armrest at C and D counterclockwise to be parallel to the column, as shown in the figure.

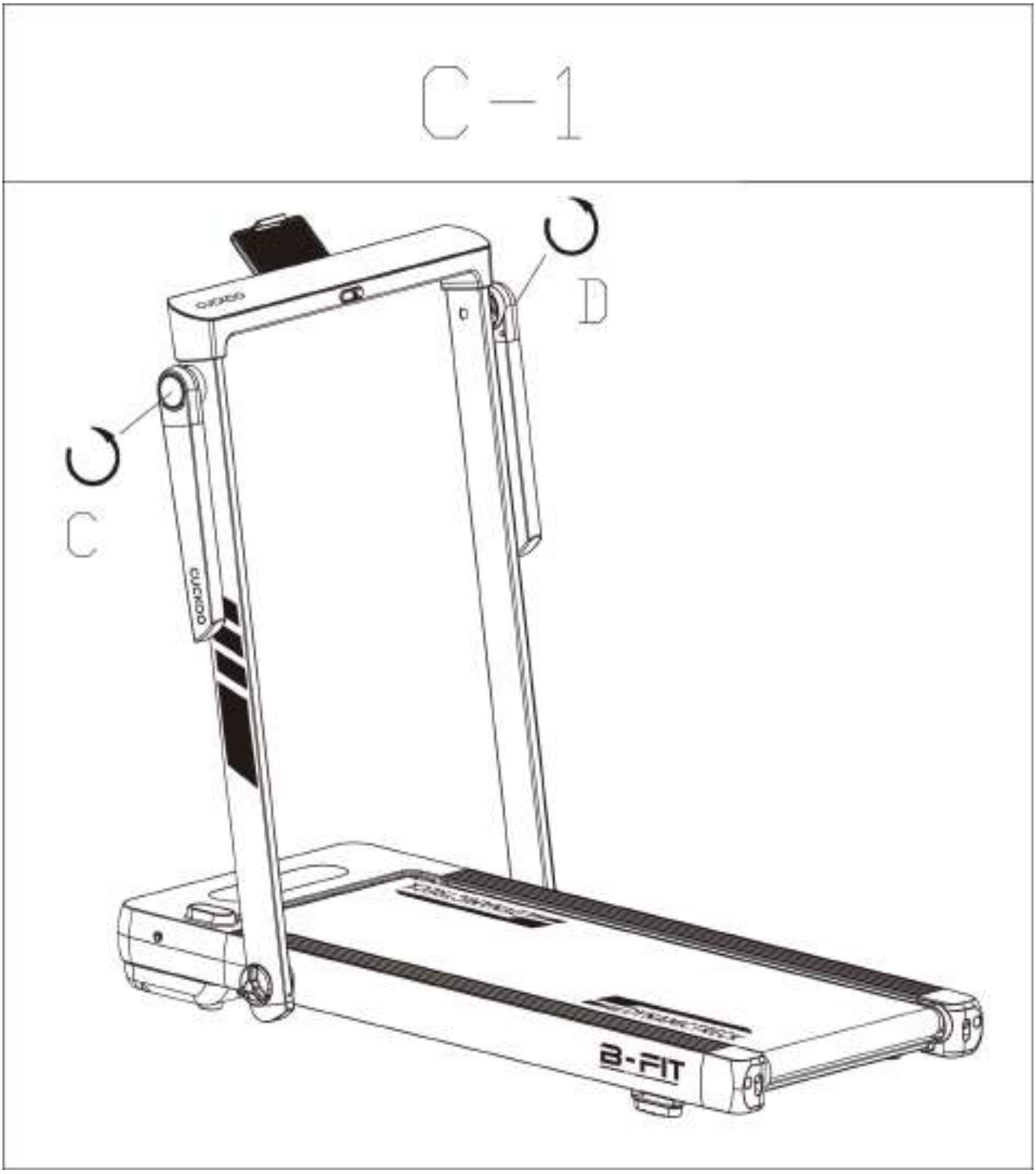

Step 2:

Loosen the knobs at positions A and B, lay the column flat, then tighten the knobs at positions A and B. Remove the iPad holder, as shown in the figure.

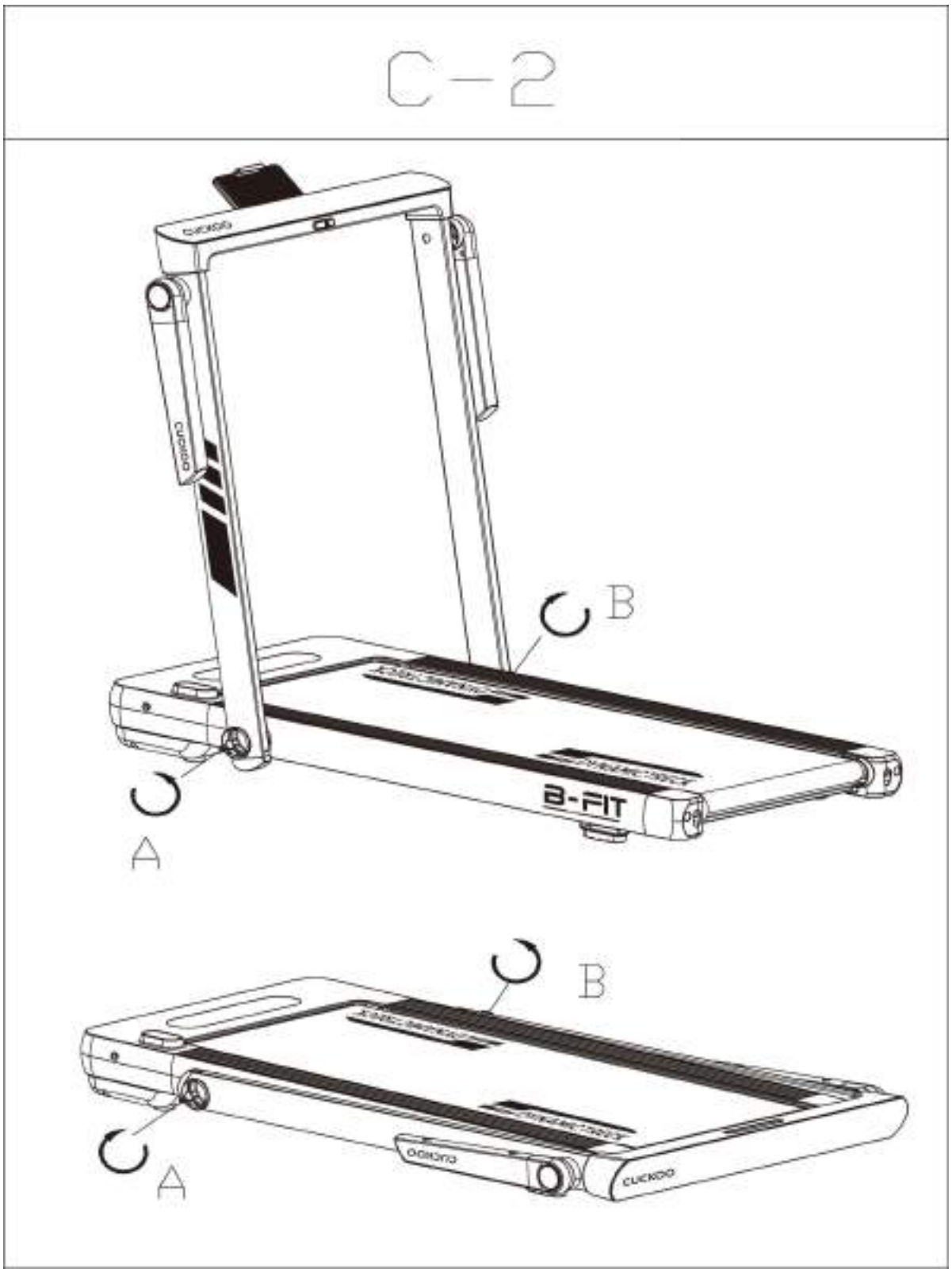

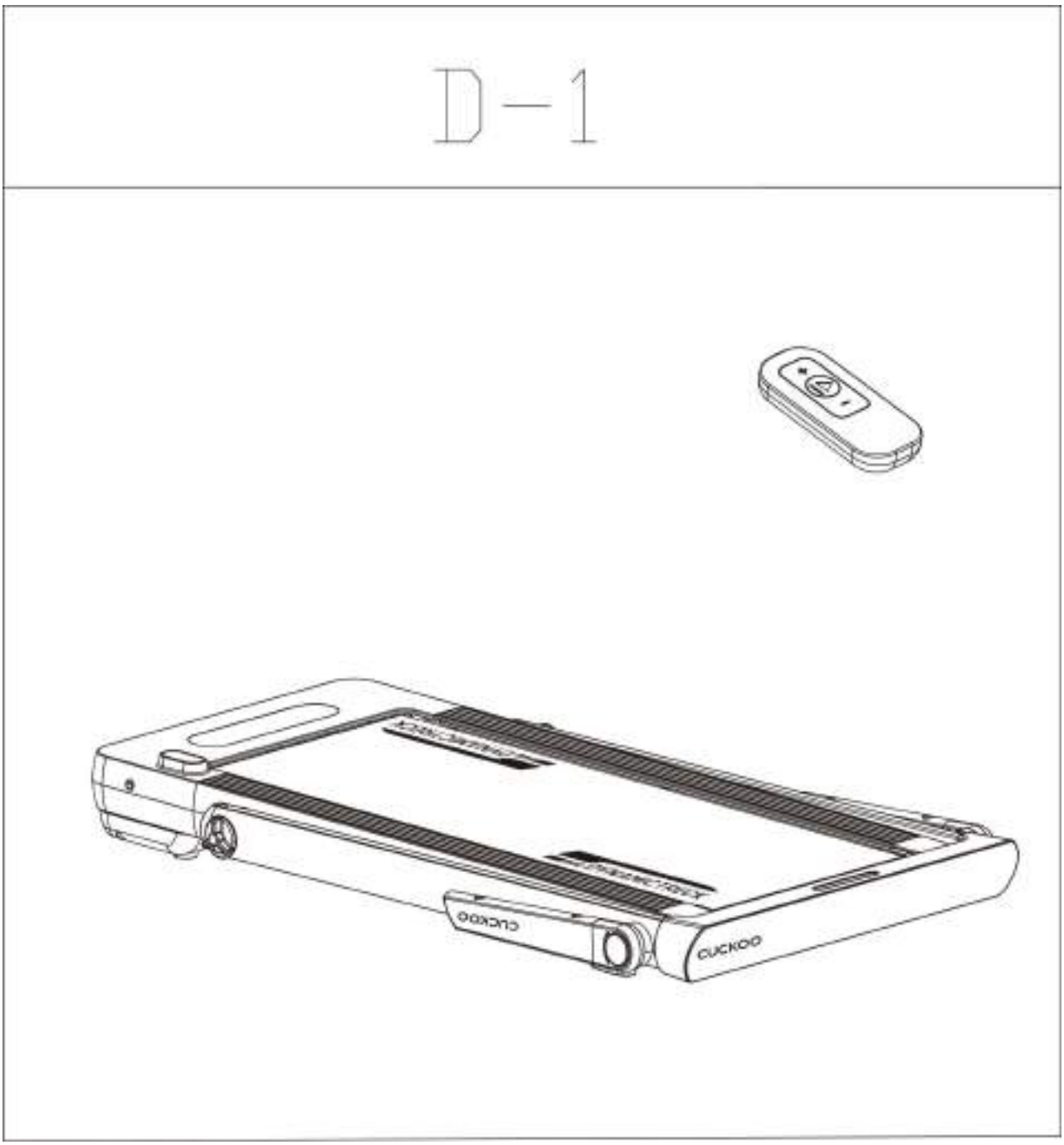

Attention:
If you need to switch to walking mode, please ensure that you remove the phone holder before lowering the handrail to avoid tripping over the iPad holder!

Transporting Instructions

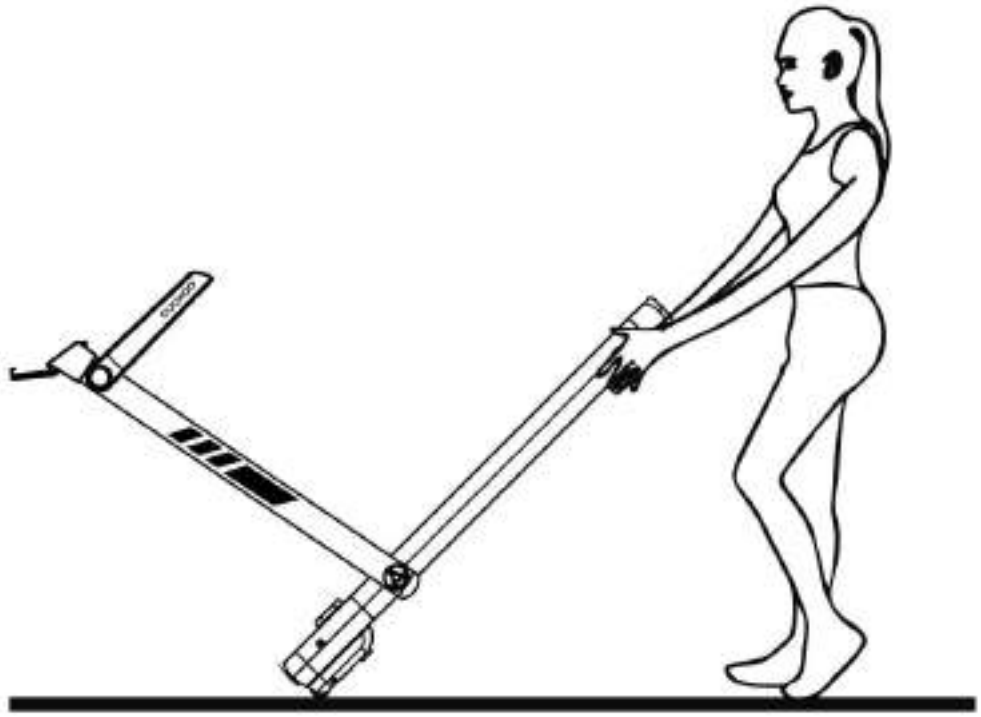

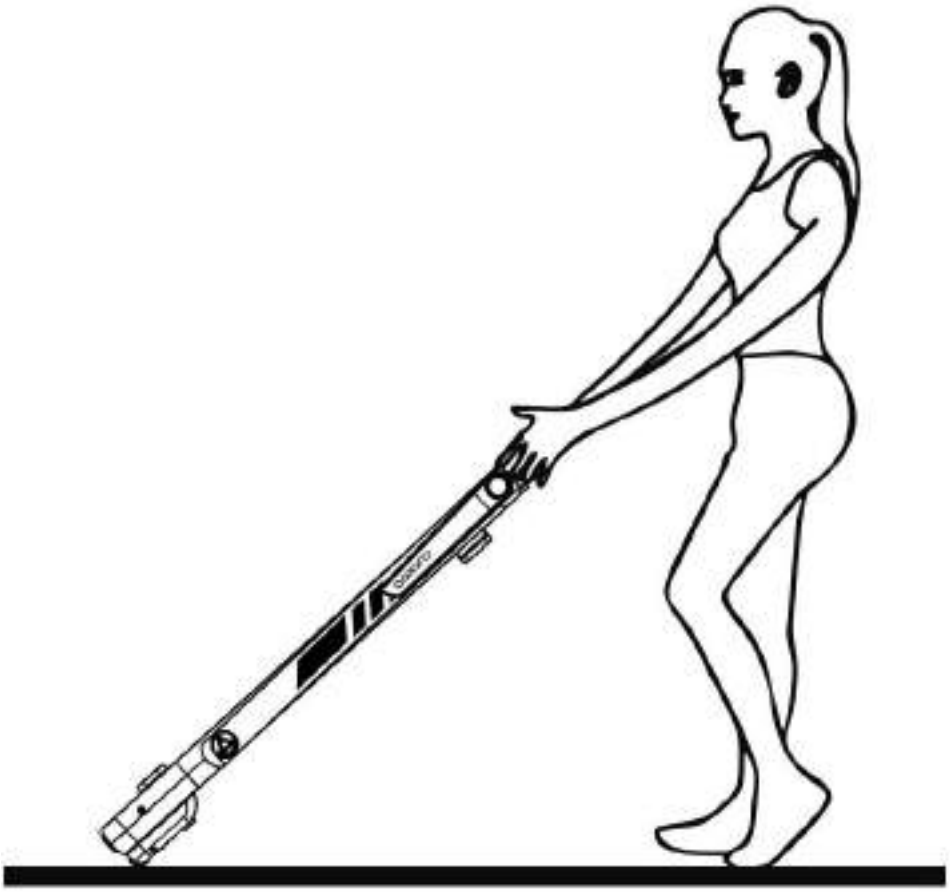

Grounding Description

The product must be grounded. In case of malfunction or breakdown, grounding provides a path of least resistance for electric current, reducing the risk of electric shock. The product is equipped with a cord containing an equipment-grounding conductor and a grounding plug. This plug must be inserted into an appropriate outlet that is professionally installed and grounded in accordance with all local codes and ordinances.

DANGER – Improper connection of the equipment-grounding conductor can result in a risk of electric shock. If you are unsure whether the product is properly grounded, consult with a qualified electrician or serviceman. Do not modify the plug provided with the product. If the plug does not fit the outlet, have a proper outlet installed by a qualified electrician.

This product is designed for use on a nominal voltage circuit and has a grounding plug that resembles the plug illustrated in sketch A in the following figure. Ensure that the product is connected to an outlet with the same configuration as the plug. Do not use any adapters with this product.

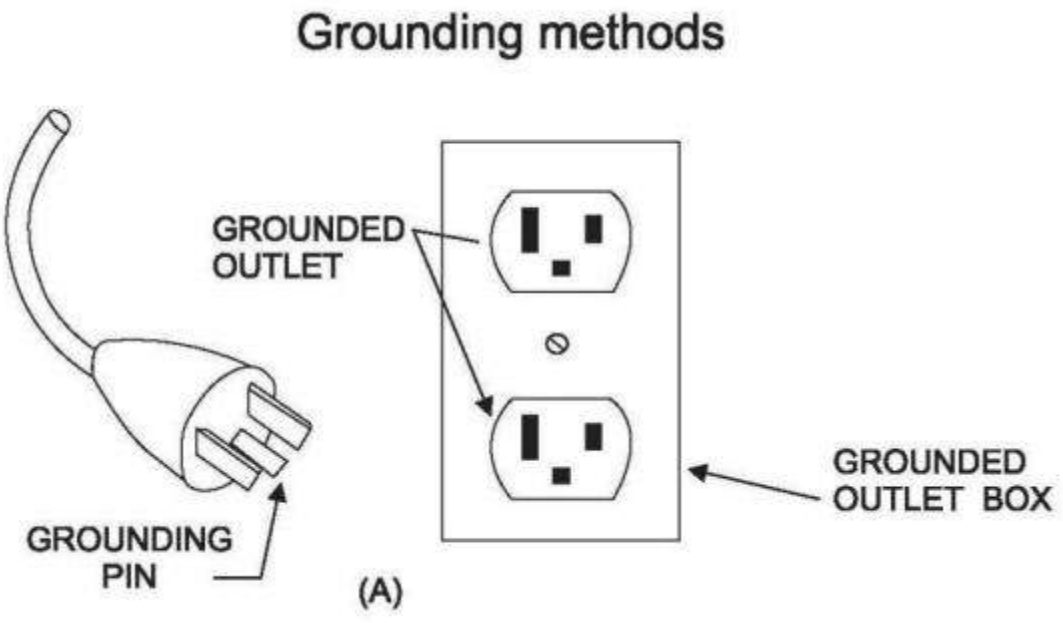

SAFETY EXERCISE TIPS

Introductory Exercise Guide

Preparation:

If you are over 35 years old or have health problems, and it's your first time engaging in fitness exercise, please consult your doctor or a fitness professional before use.

Before using the motorized treadmill, familiarize yourself with its controls, such as starting, stopping, and speed adjustment. Only when you are comfortable and familiar with the motorized treadmill should you use it.

Next, stand on the plastic skid plates on both sides of the treadmill and grasp the handrails with your hands. Turn the machine on to a low speed of 1.6~3.2 km/h. Stand upright, look forward, and lightly touch the running belt with one foot a few times. Then, step onto the running belt and begin walking with it.

As you feel comfortable, gradually increase the speed to 3-5 km/h. Maintain this speed for about 10 minutes, then slowly bring the machine to a stop.

Exercise:

Please take the time to familiarize yourself with how to control the treadmill, including speed adjustment and incline settings, before using it. Only when you feel confident and comfortable with these controls should you proceed with your workout.

Begin by walking 1 kilometer at a fixed pace and record the time it takes you. This typically ranges from 15 to 25 minutes. For instance, if you walk at a speed of 5 kilometers per hour (km/h), it may take around 12 minutes to cover 1 km/h .

Once you can easily complete this distance multiple times, gradually increase both speed and incline. Aim to achieve a challenging workout during the last 30 minutes of your routine.

Before starting your walking exercise routine, remind yourself not to rush. This exercise is about promoting your lifelong health, not achieving instant results.

Exercise Intensity

Shortcuts - Exercising for 15-20 minutes is a great way to save time.

Warm up at 3 km/h for 2 minutes, then increase the speed to 3.2 km/h and 3.6 km/h for 2 minutes each. Then increase the speed in increments of 0.3 km/h every 2 minutes until you feel your breathing quicker but not difficult. Maintain this speed for the workout and if you feel out of breath

reduce the speed by 0.1 km/h. Leave 4 minutes at the end to slow down. If you find it difficult to increase the intensity of the workout by increasing the speed, then use the method of slowly increasing the incline. A slight increase in incline will make the exercise much more intense.

Warm up at 2.4 to 3 km/h for 5 minutes, then increase the speed in increments of 0.1 km/h every 2 minutes until you feel it would be challenging to keep exercising at a certain speed for 45 minutes. To intensify your workout, you can maintain this workout speed during the hour-long TV show, make the speed increase by 0.5 km/h during each commercial interruption, and then return to the previous speed exercise during the next show so that calories are fully burned during both the commercial breaks and the subsequent increase in heart rate. Allow 4 minutes at the end to decelerate.

Frequency of exercise:

The goal is to exercise 3-5 times per week for 15-60 minutes each session. It's best to establish a workout schedule rather than exercising according to your own preferences. You can adjust the intensity of your workout by adjusting the speed and incline of the treadmill. We recommend starting without incline, but when you want to increase intensity, raising the incline is very effective.

Before beginning an exercise regimen, consult a professional who can recommend the appropriate frequency, intensity, and duration of exercise based on your age and physical condition. If you experience chest tightness, chest pain, irregular heartbeat, shortness of breath, dizziness, or any other discomfort during exercise, stop immediately and consult a professional before continuing.

If you frequently use an electric treadmill, you can choose either a normal walking speed or a jogging speed when selecting your pace. If you're unsure of the most appropriate speed for you, consider the following guidelines:

- 1.0 to 3.0 km/h: Suitable for individuals with poor constitution.
- 3.0 to 4.5 km/h: Suitable for individuals accustomed to sedentary lifestyles or minimal exercise.
- 4.5 to 6.0 km/h: Suitable for constant-speed walkers.
- 6.3 to 7.5 km/h: Suitable for fast walkers.
- 7.5 to 9 km/h: Suitable for joggers.
- 9.0-12.0 km/h: Suitable for medium-speed runners.
- 12.0-14.5 km/h: Suitable for experienced runners.
- 14.5-16.0 km/h: Suitable for excellent runners.

Please note that speeds less than or equal to 3.7 km/h are more appropriate for walking, while speeds greater than or equal to 5.0 km/h are more suitable for running. Adjust your speed accordingly based on your fitness level and comfort.

Warm-up Exercise

It is best to stretch before exercise. Warm muscles are easier to stretch. So warm up for 10 minutes with 5 minutes. Then stop and stretch as follows-5 times, 10 per leg at a time. Do it again after exercise is over for seconds or more.

1.Stretch downward: bend your knees slightly, bend slowly forward, relax your back and shoulders, and touch your toes with your hands as much as you can. Hold for 10 to 15 seconds. Then relax. Repeat 3 times (see figure l).

2. Stretch your feet: sit on a clean cushion and stretch one leg straight. Turn the other leg inward. Keep it close to the inside of a straight leg. Touch your toes with your hands as much as possible. Hold for 10 to 15 seconds, then relax. Repeat each leg 3 times (see figure 2).

3. Extension of calf and foot tendon: two stands on wall or tree, one foot behind. Keep hind legs upright and heel to the ground, incline to wall or tree. Hold for 10 to 15 seconds. Then relax. Repeat each leg 3 times (see figure 3).

4. Quadriceps stretch: hold the balance on the wall or table with your left hand, then stretch back with your right hand, grab your right heel, and pull slowly toward the hip. Until you feel the muscles in front of your thighs tense. Hold on for 10 to 15 seconds, then relax. Repeat each leg 3 times (see figure4).

5. The sartorius (muscle on the inside of the thigh) is stretched: the soles of the feet are opposite, the knees face out, and the hands grab the feet and pull towards the groin. Hold for 10 to 15 seconds. Then relax. Repeat 3 times (see figure 5).

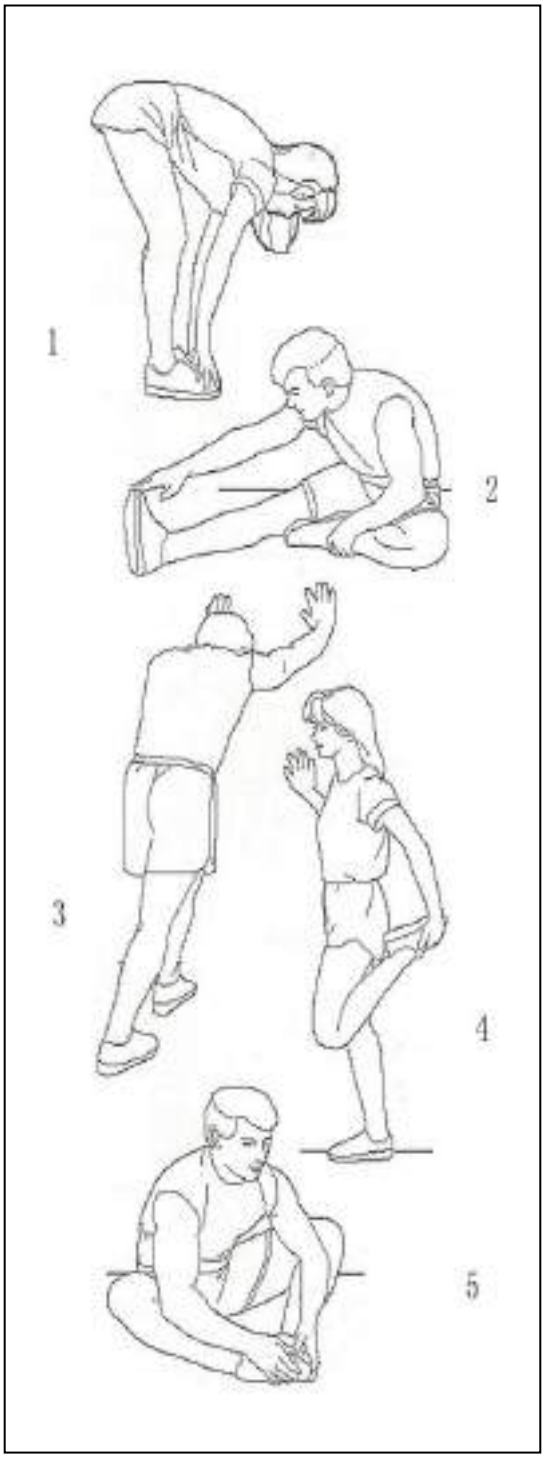

Daily Maintenance

Warning: Always unplug the electric treadmill before cleaning or performing maintenance on the product.

Cleaning: Comprehensive cleaning will extend the life of the electric treadmill.

Regularly remove dust to keep all parts clean. Pay special attention to cleaning the exposed areas on both sides of the running belt to reduce the accumulation of debris underneath. Ensure that your running shoes are clean to prevent foreign objects from getting trapped under the running belt and causing damage. Clean the surface of the running belt with a damp, soapy cloth, taking care not to splash water on the electrical components or underneath the running belt.

The running board and belt of this electric treadmill come pre-lubricated. The friction between the running belt and the running board significantly impacts the lifespan and performance of the treadmill, so it's essential to apply lubricating oil regularly.

We recommend conducting regular inspections of the running board. If any damage is detected, please contact our customer service center for assistance.

Running belt adjustment:

1. To better maintain your electric treadmill and extend its lifespan, it is recommended to use it continuously for 2 hours. After usage, turn off the power and allow the machine to rest for 10 minutes before using it again.
2. If the running belt is too loose, it may slip during running. Conversely, if it is too tight, it can reduce motor performance and accelerate wear and tear on the rollers and running belt. To adjust the tightness of the running belt, lift it from both sides with your hands. The distance between the running belt and the step plate should be approximately 50-75mm. Adjust accordingly to achieve the desired tension.

Running belt alignment:

Place the treadmill on a level surface.

Run the electric treadmill at a speed of about 5km/h and observe the deviation of the running belt.

If the running belt is tilted to the right, remove the safety key and power switch, rotate the adjusting bolt on the right side clockwise 1/4 turn, insert the power switch and safety lock to make the running machine run, and observe the deviation of the running belt. Repeat until the running belt is centered. Figure A.

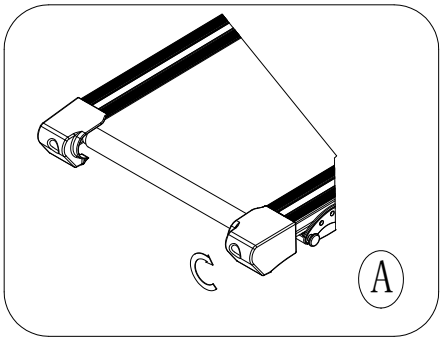

If the running belt is tilted to the left, remove the safety key and power switch, rotate the adjusting bolt on the left side clockwise 1/4 turn, insert the power switch and safety key to make the running machine run, and observe the deviation of the running belt. Repeat until the running belt is centered. Figure B

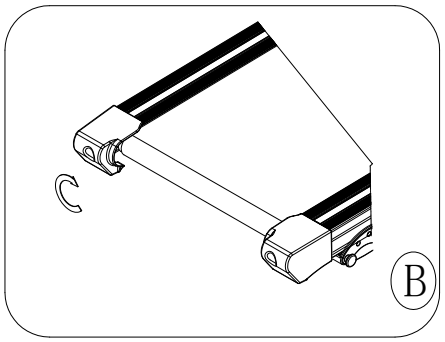

Running belt in the above adjustment or use after a period will gradually relax, need to adjust.

Remove the safety lock and power switch and rotate the adjusting bolts on both sides clockwise 1/4 turn. Insert the power switch and safety key to make the treadmill run, and then stand on the running belt to confirm the tightness. Repeat the above steps until the running belt is moderately tight. Figure C

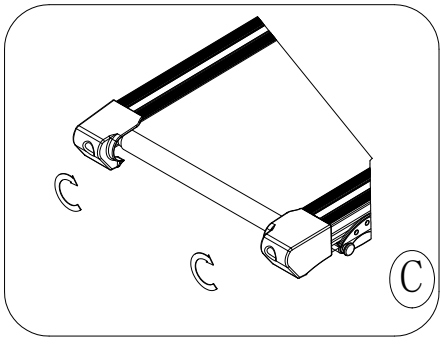

Exploded View

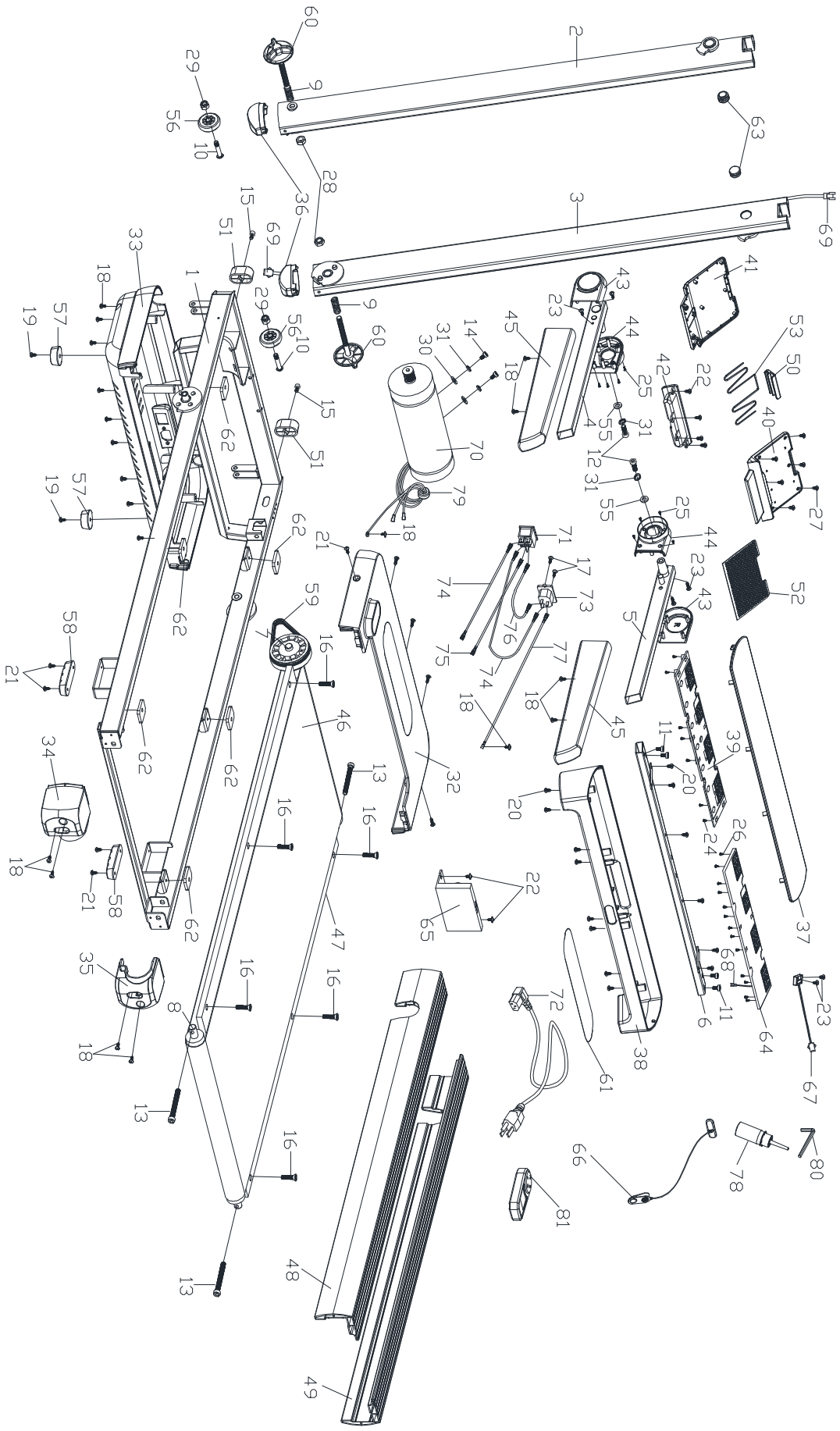

Parts List

No.	Name	Spec.	Qty	Note		No.	Name	Spec.	Qty	Note
1	Main frame		1			42	IPAD holder fastener		1	
2	Left rail		1			43	Armrest cover		2	
3	Right rail		1			44	Armrest inner cover		2	
4	Left hand bar		1			45	Foam handrail		2	
5	Right hand bar		1			46	Running belt		1	
6	Meter rack		1			47	Running board		1	
7	Front roller		1			48	Left side cover		1	
8	Rear roller		1			49	Right side cover		1	
9	spring		2			50	IPAD clip		1	
10	Hexagon socket pan head bolt	M8*30	2			51	Forefoot pad		2	
11	Hexagon socket pan head bolt	M8*20	4			52	IPDA silicone mat		1	
12	Cylindrical head hex socket bolt	M8*20	2			53	Tension rope		1	
13	Cylindrical head hex socket bolt	M8*50	3			54	IPAD holder		1	
14	Cylindrical head hex socket bolt	M8*12	2			55	Nylon gasket		2	
15	Cylindrical head hex socket bolt	M6*25	2			56	Tote wheel		2	
16	Hexagonal countersunk head bolt	M6*25	6			57	Foot pad		2	
17	Cross countersunk self tapping screws	ST3*12	2			58	Back foot pad		2	
18	Cross recessed pan head self-drilling screw	ST4*15	19			59	Wedge belt		1	
19	Cross recessed pan head self-drilling screw	ST4*19	2			60	Delta knob		2	
20	Cross recessed pan head tapping screw	ST4*15	12			61	Acrylic face sticker		1	
21	Cross large flat head bolt	M4*15	9			62	Rubber pad		6	
22	Cross recessed pan head tapping screw	ST4*10	6			63	Armrest stopper		2	
23	Cross large flat head tapping screw	ST3*10	6			64	Electronic watch		1	
24	Cross large flat head tapping screw	ST3*5	7			65	Controller board		1	
25	Cross recessed pan head tapping screw	ST2.5*8	8			66	Safety key		1	
26	Cross recessed pan head tapping screw	ST2.5*5	15			67	Safety lock sensor		1	
27	Cross countersunk head tapping screw	ST2.5*5	6			68	Digital watch		1	
28	Hexagon lock nut	M10	2			69	Digital watch under		1	
29	Hexagon lock nut	M8	2			70	DC motor		1	
30	Flat gasket	¢20*¢8.2*1	2			71	Hull switch		1	
31	Standard spring pad	¢8	4			72	Power cord		1	
32	Motor upper cover		1			73	Socket socket		1	
33	Motor lower cover		1			74	Blue single branch		2	
34	Left rear tail cover		1			75	Brown single branch		1	
35	Right rear tail cover		1			76	Brown single branch		1	
36	Column tube plug		2			77	Ground wire		1	
37	Digital watch top cover		1			78	Silicone Riecon oil		1	
38	Electronic watch lower cover		1			79	Magnetic ring		1	
39	Watch movement panel		1			80	Hexagonal plate hand	6#	1	
40	IPAD top cover		1			81	Remote control		1	
41	IPAD bottom cover		1							

CUCKOO

www.cuckoo.com.my

CUCKOO International (MAL) Sdn. Bhd.

L16, Menara Bangkok Bank, Laman Sentral Berjaya,No.105, Jalan Ampang, 50450
Kuala Lumpur, Malaysia

Careline : 1-800-88-8181Z038